ISSN 2395-1621

Design & Development of 360-degree rotation (Proto-type) Vehicle

Bhushan Sanjay More

morebhushans.27@gmail.com

Department: Design Engineering (Mechanical)
Zeal college of Engineering & Research Pune.

ABSTRACT

The design and fabrication of 360-degree wheel rotation vehicle using DC motor and steering is done to reduce time to turn from one direction to other direction. This vehicle can move in all direction at a same position by use of RF transmitter-receiver principle, steering, sprocket, DC motor, bearing and chain drive. Main function of this vehicle is easy to rotate the wheels of vehicle in all 360-degree angle position. Modern development and economical progression of Indian society resulted in increase of people on railway platform; increase of vehicle on the road due to space constraints, in hospital is major problem of the country. Present study aims for development of a system to reduce the turning radius of vehicle. In this system at first vehicle is stopped and wheels are then turned in the required direction with help of steering system and DC motor. It has turning radius nearly equal to negligible of length of the vehicle itself. This vehicle used to carry the goods in various areas such as, railway platform, hospital, industries and market.

ARTICLE INFO

Article History

Received: 2nd May 2022

Received in revised form : 2nd May 2022

Accepted : 5th May 2022

Published online : 6th May 2022

Keywords: DC Motors, RF transmitter, Bearing & chain drive, steering sprocket.

I. INTRODUCTION

This project is about design of 360-degree wheel rotating vehicle. This wheel of vehicle moves in all directions and this design provides better comfort and saves the time of customers, most of the people using this vehicle to carry goods, patient etc. But most of the time, they must face the problem like taking U turn etc. So, must design a 360-degree wheel rotating vehicle to reduce and eliminate problems in the industry and at the railway platform. Zero degree turning radius of a vehicle implies the vehicle rotating about an axis passing through the center of gravity of vehicle i.e. the vehicle turning at the same place, where it is standing. No extra space is required to turn the vehicle. So, vehicle is to be turned in the space equal to the length of the vehicle itself. The DC motor is connected to wheels to run the vehicle. Our vehicle is rotate using WIFI operated in which RF transmitter receiver principle is used. All four wheels at one time rotated at 360 degree using buttons in the mobile application. So, as a result this arrangement of the vehicle wheels to turn 90 degrees left and 90 degree right from original position, but front wheels of this vehicle rotate 360 degree by controlling wheels direction Without moving from the spot, i.e. the vehicle has zero turning radius. This helps in manoeuvring the vehicle in tight spaces such as parking lots and within small compounds. The various functions of the wheel are to control the angular motion the wheels, direction of motion of the vehicle, to provide directional stability of the vehicle while going straight ahead, to facilitate straight ahead condition of the vehicle after completing a turn, the road irregularities must be damped to the maximum possible extent. This should co-exist with the road feel for the driver so that he can feel the road condition without experiencing the effects of moving over it. The advanced new technology has led to various modifications in the automobile sector. Out of these, zero degree turning radius which is being analysed in various vehicles e.g. hurricane jeep, JCB, Nano Pixel etc. The turning circle of a vehicle is the diameter described by the outside wheels when turning on full lock. There is no hard and fast formula to calculate the turning circle, but it can be calculated using this; Turning circle radius= (track/2) + (wheelbase/sin (average steer angle)). Zero degree turning radius of a vehicle implies the vehicle rotating about an axis passing through the center of gravity of vehicle i.e. the vehicle turning at the same place, where it is standing. No extra space is required to turn the vehicle. So, vehicle can be turned in the space equal to the length of the vehicle itself. This technology exists in heavy earth movers like excavator which consists of two parts i.e. the upper part cabin and

lower part crawler chain. The upper part of excavator can rotate about its center, so that the direction of cabin can be changed without changing direction of lower part. Conventional steering mechanism involves either the use of Ackerman or Davis steering systems. The disadvantage associated with these systems is the minimum turning radius that is possible for the steering action. This difficulty that is associated with the conventional methods of steering is eliminated by employing a four-wheel steering system. In this system, the wheels connected to the front axles are turned opposite to each other, and so are the wheels connected to the rear axle. The wheels on the on left half vehicle rotate in one direction and the ones on the right half of the vehicle rotate in the opposite direction. This arrangement of the wheels enables the vehicle to turn 360 degrees, without moving from the spot, i.e. the vehicle has zero turning radiuses. This helps in manoeuvring the vehicle in tight spaces such as parking lots and within small compounds. Automobile giants in India like Tata, Maruti, Hyundai, Honda, Ford, Mahindra and Mahindra etc.

Manufacturing more than 3 million vehicles per year. These companies are designing and producing varieties of models to fulfil the market competition and consumer satisfaction. The companies are emphasizing more about the ergonomics, aesthetic features, fuel economy, space available and many other features. It includes broadly power window, center lock, power brake system, power steering, tubeless tires, etc. In development of new cars, the major or minor improvements were made in every car's feature. Furthermore, manufacturing and servicing automobiles has become one of the biggest businesses.

II. PROBLEM STATEMENT

A vehicle with higher turning radius face difficulty in parking and low speed cornering due to its higher wheel base and track width, but the passenger prefer the vehicle to be higher wheelbase and track width as It gives good comfort while travelling. In this scenario four wheel steering will be effective as the turning radius will be decreased for the same vehicle of higher wheel base. In this project a benchmark vehicle is considered and four wheel steering is implemented without change in dimension of the vehicle and reduction in turning radius is achieved. The main problem associated in city areas is traffic. This condition is very time consuming and also sometimes it is difficult to come out in the emergency situations for example of hospital or fire safety conditions.

Here Fig.(1) shows the traffic at the area considered. Sometimes it is difficult to park a vehicle in condition when two car parked one to another spaced between them. Thus this condition also consumes times for the life style. Also there may be chance of Sudden brakeage and chance of accident and damage for the vehicle.

Fig.(2) shows the problem associated in parking at certain situation.

Figure1:Traffic problem Figure 2: Parking problem

III. LITERATURE SURVEY

Jaishnu Moodily, et al.[5]: The idea of 360 degree wheel rotation load carry vehicle is analyzed from; presented a 360 degree rotating car to overcome the problem of parking space. This car has zero degree turning radius of a vehicle implies the vehicle rotating about an axis passing through the center of gravity of vehicle i.e. the vehicle turning at the same place, where it is standing. No extra space is required to turn the vehicle. So vehicle is to be turned in the space equal to the length of the vehicle itself. In this presentation, so got idea of 360 degree wheel rotation vehicle and have plane to make 360 degree wheel rotation load carry vehicle, this vehicle is to be used in different area like industries, hospital, railway platform, etc.

Sudip Kachhia [8]:Sudip presented a 360 degree rotating vehicle to overcome the problem of parking space. This project is about design of 360 degree rotating car to move in all direction. This design provides better comfort and also saves the time of customers, that's why it is also the reliable for the customer. As it is also battery operated car thus no fuel is required. Hence it is economical to the environment. This also reduces the cost of the car, and also got idea to use battery to operate this vehicle.

K. Lohith: Lohith presented a four wheel steering system for a car. In four wheel steering the rear wheels turn with the front wheels thus increasing the efficiency of the vehicle. The direction of steering the rear wheels relative to the front wheels depends on the operating conditions. At low speed wheel movement is pronounced, so that rear wheels are steered in the opposite direction to that of front wheels with the use of DC motor to turn left and right. In this presentation, the use of DC motor is to rotate the wheels 90 degree left and 90 degree right from original position.

Er. Amitesh Kumar[1]: Mr.Kumar presented zero turn four wheel steering system, the various functions of the steering wheel are, to control the angular motion the wheels, direction of motion of the vehicle, to provide directional stability of the vehicle while going straight ahead, to facilitate straight ahead condition of the vehicle after completing a turn, the road irregularities must be damped to the maximum possible extent. This project the use of steering is to rotate front wheels.

H. Azadi and Z. Taherkhani:Autonomous Parallel Parking of Car Based Parking Space Detection and Fuzz Controller International Journal of Automotive Engineering Vol.2 Number 1 January 2012.The research in car parking problem is derived from general motion planning problem and its usually defined as finding a path that connect the initial configuration to the final one with collision free capabilities and by considering non homonymic constraints. Using our model we present a solution to the autonomous

parallel parking problem Computation of a path to be followed to accomplish the parking maneuver. There is a sufficient space on the obstacle we choose to go. The obstacle avoidance and parking spot localization worked with a success rate of approximately 90%. We also would like to improve our actual parallel parking producer by alloying the robot make adjustment once it is parked.

Sathyabalan[3] shows that the fabricated the four wheel steering can operate three mode operation. The project is to steer the vehicle according to the requirement. The four wheel steering is more required in critical roads and in desert roads. In this implementing three steering modes in a single vehicle and the modes can be changed as needed.

Lohith shows that the Four-wheel steering is a serious effort on the part of automotive design engineers to provide near-neutral steering. In certain cases like low speed cornering, vehicle parking and driving in city conditions with heavy traffic in tight spaces, driving would be very difficult due to vehicle's larger wheelbase and track width. Hence the requirement of a mechanism which results in less turning radius arises and it will be achieved by implementing four wheel steering mechanism instead of regular two wheel steering. The rear wheels were drawn out of phase to the front wheels. In order to achieve this, a mechanism which consists of two bevel gears and intermediate shaft which transmit 100% torque as well turns rear wheels in out of phase was developed

IV. BLOCK DIAGRAM

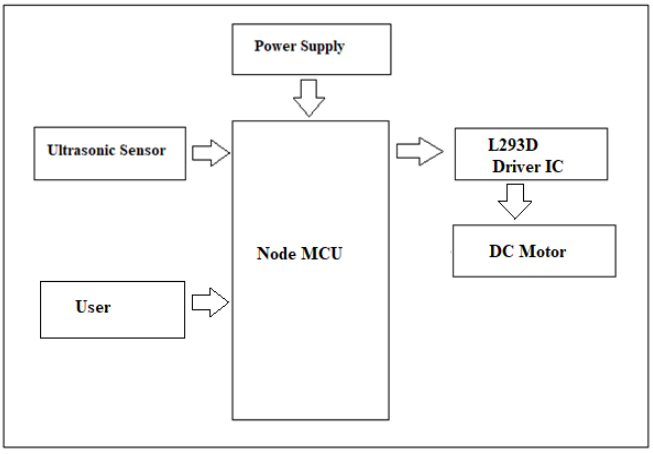

Fig.3 Block diagram

Components Description:

Wheels: A wheel is a circular component that is intended to rotate on an axle bearing. It is one of the main components of the wheel and axle which is one of the six simple machines. Wheels, in conjunction with axles, allow heavy objects to be moved easily facilitating movement or transportation while supporting a load, or performing labor in machines. Wheels are also used for other purposes, such as a ship's wheel, steering wheel, potter's wheel and flywheel.

Bush for axel: Generally, bush used for as a supporting member for gears, sprockets, shaft A bushing, also known as a bush, is an independent plain bearing that is inserted into a housing to provide a bearing surface for rotary applications; this is the most common form of a plain bearing. Common designs include solid (sleeve and flanged), split, and clenched bushings. A sleeve, split, or clenched bushing is only a "sleeve" of material with an inner diameter (ID), outer diameter (OD), and length. The difference between the three types is that a solid sleeved bushing is solid all the way around, a split bushing has a cut along its length, and a clenched bearing is similar to a split bushing but with a clench (or clinch) across the cut. A flanged bushing is a sleeve bushing with a flange at one end extending radially outward from the OD. The flange is used to positively locate the bushing when it is installed or to provide a thrust bearing surface.

DC Motor drive : A DC motor is any of a class of rotary electrical machines that converts direct current electrical energy into mechanical energy. The most common types rely on the forces produced by magnetic fields. Nearly all types of DC motors have some internal mechanism, either electromechanical or electronic; to periodically change the direction of current flow in part of the motor.

Shaft: Shaft is a common and important machine element. It is a rotating member, in general, has a circular cross-section and is used to transmit power. The shaft may be hollowor solid. The shaft is supported on bearings and it rotates a set of gears or pulleys for the purpose of power transmission. The shaft is generally acted upon by bending moment, torsion and axial force.

V. DESIGN & CALCULATION

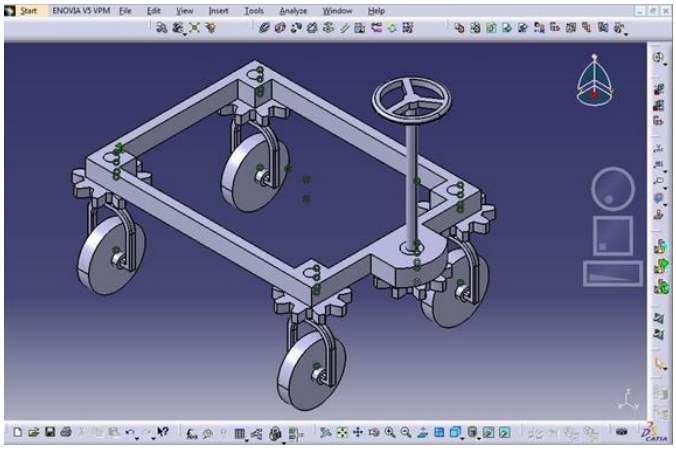

Fig. 4 Design of Prototype

MOTOR CALCULATION

Specification and calculation:

- 60 rpm
- 12 V
- 18 W

Torque of motor: $\zeta = \frac{P \times 60}{2 \times 3.14 \times N} = \frac{18 \times 60}{2 \times 3.14 \times 60}$

$= 2.866 \text{ Nm} = 2.866 \times 10^3 \text{ N-mm}$

The motor shaft is made of MS and its allowable shear stress (Fd)= 42 MPa Torque: $\zeta = \frac{3.14 \times F_d \times d^3}{16}$

$5.72 \times 10^3 = \frac{3.14 \times 42 \times d}{16}$

d = 7.031 mm

The standard nearest size diameter is 8mm.

We know that turning Radius of vehicle (R) = 1500 mm.

Also we know that, Turning radius of vehicle: $R = a2^2 + R1^2$

Where, a2 = Distance of CG from rear axis.

R1= Distance between instantaneous center and the axis of the vehicle.

To find a2

Load on front axel: Wf= (W× a2)/ L

Where, Wf = Load on front axle = 17kg (On basis weight distribution)

Total weight of vehicle (W) = 30kg

Wheel base (L) = 2669 mm

Therefore,

a2 = 1200 mm

Substituting the value of a2 in the above equation

R1 = 2010 mm

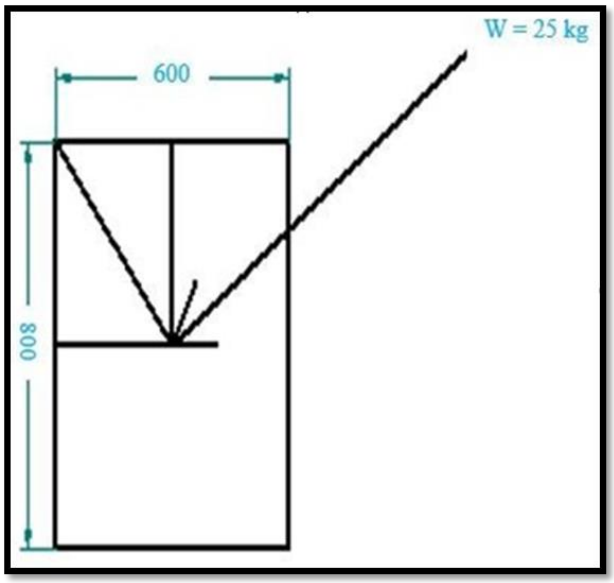

Length = 600 mm Width=800 mm R=500 mm

To find reaction force on each wheel (F), torque (T)

Now

Assume W= 25kg = 25 × 9.81 = 245.25N

Now Force on each wheel $\frac{W}{4}$ =61.32N According to newton's 3rd law of motion

Reaction Force developed by each wheel: $=\frac{W}{4}$ = 61.32N Now Torque on each wheel: T

$=\frac{W}{4} \times r$ = 30660 N-mm

VI. ANALYSIS

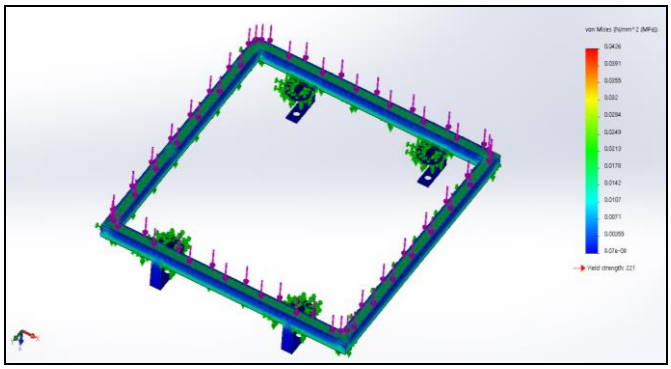

Fig.5 Displacement Analysis

Node	X (mm)	Y (mm)	Z (mm)	URES (mm)
1926	-159.5	230	67.5	1.01E-05
4851	-153.5	230	67.5	1.01E-05
1433	159.5	-230	67.5	1.00E-05
4856	-159.5	230	66	1.00E-05
1933	-147.5	230	67.5	9.99E-06

VII.ACKNOWLEDGE

I'd like to thank Dr. P.B.Magade, my research supervisors, for their patient instruction, passionate support, and constructive criticisms of this study effort.

I'd also want to thank Mr.Abhay Sir for his guidance and help in keeping my development on track.

I'd also want to thank the technicians at department's laboratory for their assistance in providing me with the resources I needed to run the application.

VIII. CONCLUSION

A prototype for the proposed approach was developed by DC motor to rotate the wheels in 360 degree. This prototype is found to be able to move and turn very easily in tight spaces, and after manufacturing of 360 degree wheel rotation vehicle consumed very less space to turn from one direction to another direction and it consumes less time to turn and this vehicle used in various areas such as small industries, railway platforms, parking areas, etc.

IX. REFERENCES

1] Oviya.R, Sasitharan.L, Kathiravan.S, Sreeman.C," FABRICATION OF 360 DEGREE ROTATING WHEEL IN ELECTRIC VEHICLE", 5th Inter National Level Conference - "MEEMIC – 2019, ISSN: 2349-2163 Issue 03, Volume 6 (March 2019)

2] Anoop Thankachan 1, Akhil Raveendran," Design of 360 Degree Rotating Car Aided For Parking", ISSN(Online): 2319-8753,ijirset, Vol. 7, Issue 4, April 2018

3] Meghraj Gadhavel, 2Tejas Chaudhari , 3Ankita Kumari, 4Prof. Dr.M.H.Attal,", FIFTH WHEEL CAR PARKING",

Volume 6 Special Issue- AIMTMREF June 2021 ISSN (Online) 2456-3293.

4] N.Dinesh1, V. Ashok Kumar," Design and Fabrication of 360 Degree Car Parking", International Journal of Engineering Research & Technology (IJERT) ISSN: 2278-0181,Published by, ijert, ETEDM - 2021 Conference Proceedings Volume 9, Issue 10

5] Sarvind Kumar, Anurag Ranjan," 360 DEGREE WHEEL ROTATION VEHICLES",ISSN:2320-2882,IJCRT

6] Sarvind Kumar, Anurag Ranjan, Ujjawal Kumar, Divakar Kumar, Dhruv Kumar. 360 DEGREE WHEEL ROTATION VEHICLES. International Journal of Creative Research Thoughts(IJCRT) ISSN : 2320-2882. Volume 8, Issue 6 June 2020.

7] Anoop Thankachan , Akhil Raveendran , Arun Kumar S., Gawtham P., Roy Philip, Vishnu Ashok. Design of 360 Degree Rotating Car Aided For Parking. International Journal of Innovative Research in Science, Engineering and Technology(IJIRSET). ISSN: 2319-8753. Vol. 7, Issue 4, April 2018.

8] Sudip Kachhia. DESIGN OF 360 DEGREE ROTATING CAR. IJARIIE-ISSN(O)-2395-4396. Vol-2 Issue-5 2016.

9] N. Dinesh, V. Ashok Kumar, A. Arul Christon, B. Dharshan, M. Muthu Kumar. Design and Fabrication of "360 Degree Car Parking". International Journal of Engineering Research & Technology (IJERT) ISSN: 2278-0181. Special Issue 2021.

